sensio
furniture lighting solutions

Universal Corner Connector

SE00179

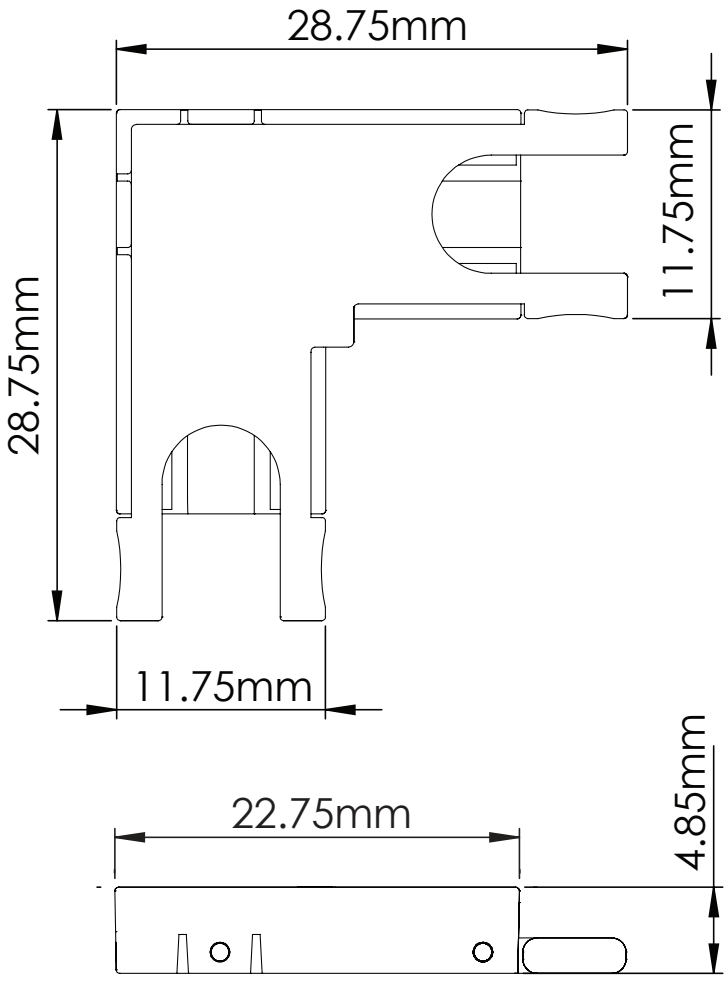

IMPORTANT INFORMATION ALL measurements in this document are set in MM (Millimetres)